DRIVE TRAIN, MAIN GEARCASE MOUNTING - Z26S4D92AN/AH/BN/BH (C750261)

2026 RZR - RZR PRO S4 ULTIMATE (R01) - Z26S4D92AN/AH/BN/BH

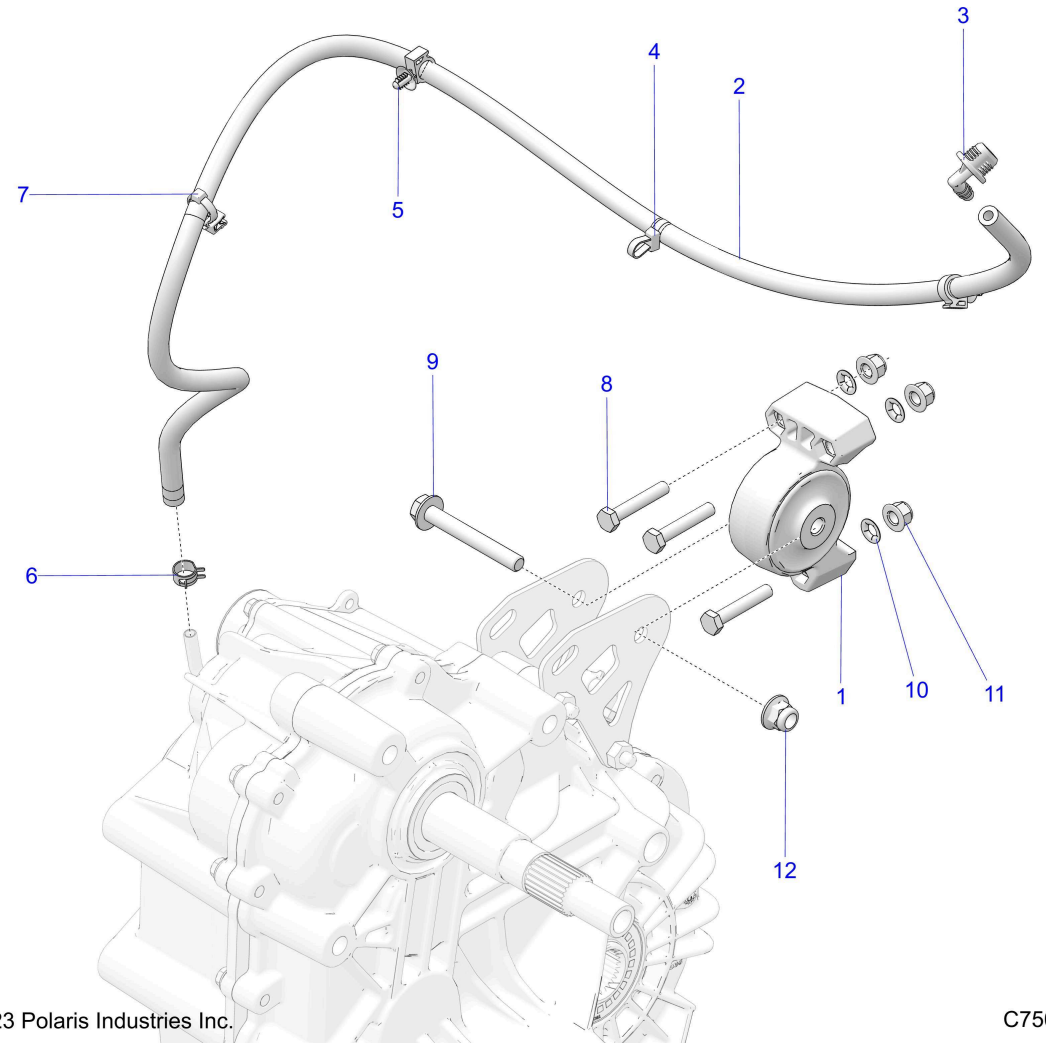

© 2023 Polaris Industries Inc. C750261

Reference #	*Part#*	*Description*	*Quantity*
1	1333430	MOUNT, ISOLATOR	1
2	2522142	ASM-VENT LINE,TRANS	1
3	5453464	FITTING-VENT LINE,90	1
4	7081916	CABLE-TIE,DIA6-38MM,DUAL-LOOP	1
5	7670116	CLIP, ROUTING, .472 B.D., HINGED	2
6	7081432	CLAMP-HOSE, 17/32, GREEN	1
7	7082402	CLIP-EDGE, 1-3mm THICKNESS	1
8	7519097	SCREW-HH M8X1.25X45 8.8 ZOD	3
9	7519286	SCR-HXFL-M10X1.25X75 10.9 ZOD	1
10	7547030	NUT-5/16-PAL-Y	3
11	7547332	NUT- M8X1.25, FLG, NYLOC-OLIVE D	3
12	7547333	NUT-HXFL M10X1.25 8 ZTB NYL	1

Copyright 1996-2026 Polaris Industries U.S.A All rights reserved.